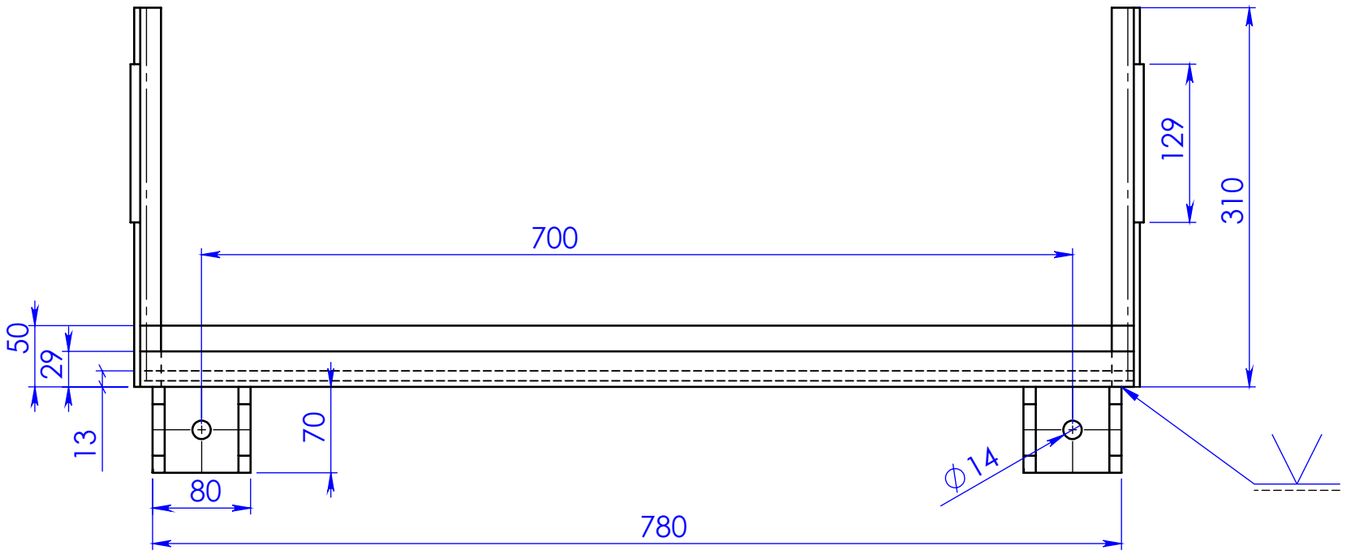

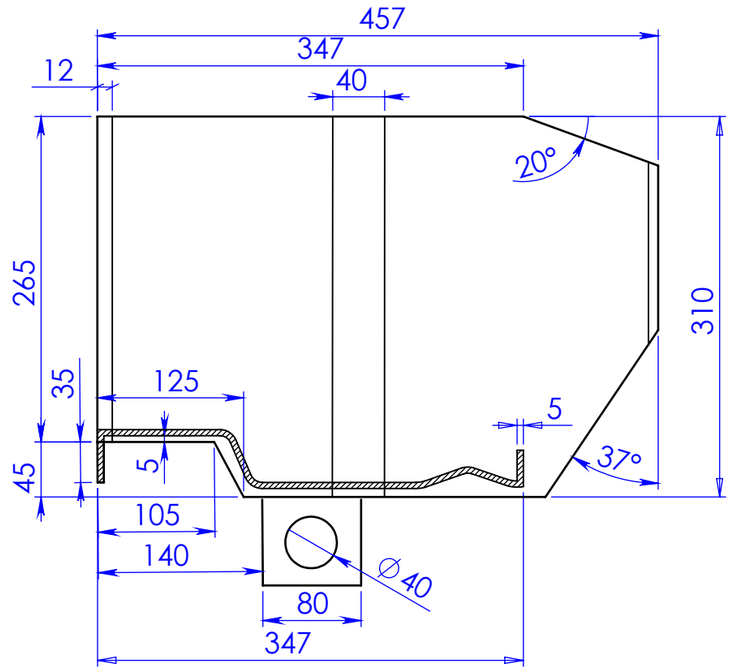

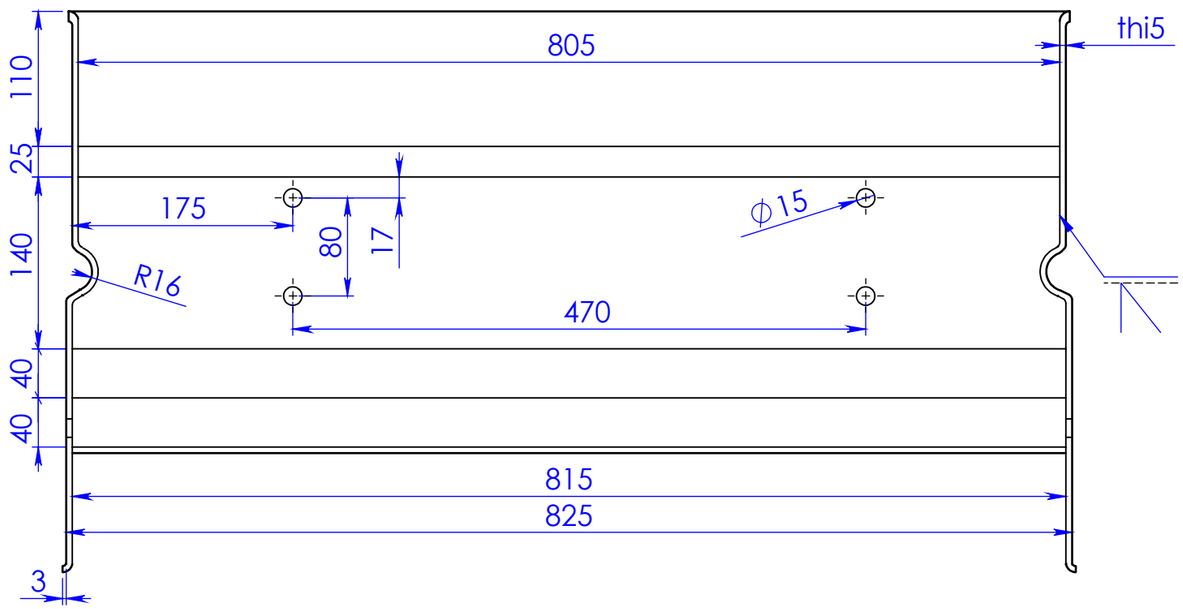

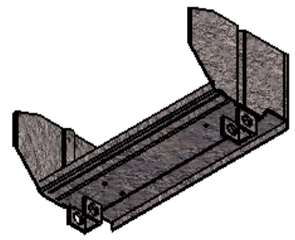

UNLESS OTHERWISE SPECIFIED: DIMENSIONS ARE IN MILLIMETERS SURFACE FINISH: TOLERANCES: LINEAR: ANGULAR:	FINISH:		DEBUR AND BREAK SHARP EDGES	DO NOT SCALE DRAWING	REVISION
	NAME	SIGNATURE	DATE	TITLE: Clinker transportation **Atbjds**	
DRAWN	h-torkemandi		91.07.12		
CHK'D	A-heydari				
APPV'D					
MFG					
Q.A				MATERIAL:	DWG NO. 0004 A3
				WEIGHT:	SCALE:1:10 SHEET 1 OF 1